ARCEUS ELECTRIC COMBI BOILER

ARCEUS
6-9-12-15-18-24-27 kW MT / CH / ST

USER AND INSTALLATION MANUAL

CONTENTS

1. INTRODUCTION 4
2. WARRANTY AND SERVICE 4
3. SYMBOLS 4
4. SAFETY RULES AND WARNINGS 5
   - 4.1 Safety Rules 5
   - 4.2 Installation 5
   - 4.3 Assembly 5
   - 4.4 Commissioning 5
   - 4.5 Operation and Maintenance 5
5. PRODUCT 6
   - 5.1 General Specifications 6
   - 5.2 Product Notation 7
   - 5.3 Wiring Diagrams 8
   - 5.4 Detailed View, Component List and Installation 12
6. PACKAGING 15
7. ASSEMBLY 15
   - 7.1. Selection of Device's Assembly Location 15
   - 7.2. Wall Mounting of the Device 16
8. CONNECTIONS 17
   - 8.1 Water Pipe Connections 17
   - 8.2 Electrical Connection 19
   - 8.3 Room Thermostat 21
9. INITIAL START-UP, OPERATION AND SHUT DOWN 22
10. CONTROL PANEL 23
11. ERROR CODES AND DESCRIPTIONS 27
12. USEFUL PRODUCT INFORMATION 28
13. DISPOSAL OF THE DEVICE 29
14. TECHNICAL DATA TABLE 30
15. ERP MANUAL 31

1- INTRODUCTION

First of all, thank you for choosing E.C.A.

E.C.A. ARCEUS electric combi boilers are intended for meeting central heating and hot domestic water requirement in an efficient, safe, and comfortable manner. ARCEUS electric combi boilers can operate on 220-240 VAC (6/9/12 kW) and 380-415 VAC (6/9/12/15/18/24/27 kW) power.

MT model: It is intended for both central heating and hot domestic water requirement.

CH model: It is for central heating requirement only.

ST model: It is intended for both central heating and hot domestic water requirement. A boiler connection is required to meet the hot domestic water requirement.

This manual contains assembly and operation information for 6/9/12/15/18/24/27 kW ARCEUS electric combi boilers. The manual gives detailed information on the technical specifications of the device, selection of device's installation location, water, and electrical connections, maintenance information, and detection and elimination of possible faults. Please read your manual carefully to benefit from all the features of your device and use it smoothly for a long time.

Keep all documents provided with your device for future reference.

2- WARRANTY AND SERVICE

- All repair and annual maintenance tasks must be performed by the E.C.A. authorized services. The device is under the warranty of E.C.A authorized service for 3 years against all kinds of malfunctions that may arise from material and workmanship, provided that the instructions and warnings in the installation and operation manual are followed.
- The commissioning operation must be carried out by the E.C.A. authorized service. In order for the warranty to be valid, you must have the warranty certificate provided with the manual approved by the authorized service during the commissioning, and the date of initial start-up must be written on the warranty certificate.
- This E.C.A. product requires no repair under normal conditions of use. However, if you need help with any issue, the after-sales customer service organization of E.C.A (EMAR) that is spread throughout the entire country is at your disposal at any time. All maintenance-repair operations on the device must be carried out by the E.C.A. authorized services for continued warranty coverage.
- Information on all authorized service stations for the products and the places where spare parts will be supplied can be found at "http://emas.com.tr/tr/bayi_servis/".

All authorized service station information can be accessed through the Service Information System (SERBİS-"www.servis.gov.tr") established by the Ministry.

The lifetime for boiler devices as determined and announced by the Ministry of Commerce is 10 years.

3- SYMBOLS

The following symbols are placed at the necessary points in the text to draw attention to the important points regarding the operation and installation of the device. The meanings of the symbols are described below.

Indicates situations that the user should not intervene, and are under the responsibility of the authorized service.

These are descriptions containing information that should be taken intoconsideration by the user.

CAUTION: Indicates that material damage or slight personal injury may occur.
DANGER: Indicates that severe personal injury may occur.

4- SAFETY RULES AND WARNINGS

4.1- Safety Rules

The power line to which the device is connected must have cross-sectional dimensions as specified in the manual and grounded. For three-phase operating devices, a three-phase power supply must be available at the installation location. Leakage current protection relay must be connected before the device input.

4.2- Installation

- Electrical, central heating, and hot domestic water installations must be completed before the assembly of your device.

4.3- Assembly

- The device must be assembled by an authorized installation agent in accordance with the standards in the assembly manual.
- The device must be mounted on a flat, rigid wall that can withstand its weight. The device should not be mounted so that it is directly exposed to water vapor, detergent vapor, etc.
- The initial start-up of the device must be performed by the authorized service.
- Sun exposure can cause discoloration on the outer surface of your device over time.
- The device should normally be installed indoors. However, it can also be installed within a suitable cabinet in places such as a garage, open balcony, etc. Consult E.C.A. for appropriate cabinet size.
- If the device is located in an unheated location, it should be powered on, switched on, and within the operating pressure range of installation so that freeze protection would be activated. The freeze protection remains active even if the device is in OFF (closed) position.

4.4- Commissioning

- The initial start-up of the device must be performed by the authorized service.
- Whether the maximum water pressure (bar) for the device and the rated voltage of the power supply in the information label are compatible with the local supply conditions must be precisely checked.
- After the installation and initial start-up operations of the device are completed, ask the authorized service for information about how to operate the device and the safety devices.

4.5- Operation and Maintenance

- Observe the warnings in the installation and operation manual. This will prevent any misuse and associated hazards.
- Regular annual maintenance is recommended for your device work to operate more efficiently. Maintenance operations are out of warranty and must be carried out by the E.C.A. authorized services.
- The outer surfaces of the device should only be cleaned with a damp cloth without using detergent or any chemicals. Using chemicals such as detergent, etc. may cause corrosion and scratches on your device.

CAUTION: This device is not intended for use by persons (including children) with reduced physical, sensory or mental capabilities, or lack of experience and knowledge unless they have been given supervision or instruction concerning the use of the device by a person responsible for their safety. Children should be supervised to ensure that they do not play with the appliance. Cleaning and user maintenance should not be made by unattended children.

CAUTION: This device is not intended for use by persons (including children) with reduced physical, sensory or mental capabilities, or lack of experience and knowledge unless they have been given supervision or instruction concerning the use of the device by a responsible person. Children should be supervised to ensure that they do not play with the device.

CAUTION: If the device is used incorrectly and inappropriately, it may pose a life-threatening risk and may cause material damage to the product and its surroundings.

5- PRODUCT

5.1- General Specifications

The control panel is designed ergonomically and user-friendly. ARCEUS Electric Combi Boilers, with a visualized plastic control panel and an advanced LCD screen, perform the heating function by water circulation through a heat exchanger with gradually activated electric heaters. ARCEUS Electric Combi Boilers provide ease of use and service. On LCD screen with a black instrument panel; you can see the operating state icons, heating circuit and operating water adjustment values, the fault/error codes, and the heating water installation pressure.

The safety systems in your device provide safety for both you and your device. These safety systems are:

- Heating Circuit Water Overheating Safety (88 °C)
- DHW (Domestic Hot Water) Overheating Protection (71 °C)
- High Water Pressure Protection (3 bar)
- Low Water Pressure Protection (0.4 bar)
- Low Voltage Protection (170 VAC-300 VAC)
- High Demand for Hot Water Protection (with Internal By-pass circuit and pump over-run)
- Contactor
- Automatic Circuit breaker
- Anti-freeze Protection for both Central Heating and Domestic Water Circuit Domestic Water Flow Control
- Pump Jamming Safety
- 3-Way Valve Jamming Safety
- Automatic Air Purge
- Expansion Tank (8 liters)
- Annual Maintenance Reminder System

5.2- Product Notation

NOTATION	DESCRIPTION
ARCEUS 12-15-18-24-27 MT	ARCEUS Monothermic Electric Combi Boiler
ARCEUS 6-9-12-15-18-24-27 CH	ARCEUS Central Heating Electric Combi Boiler
ARCEUS 6-9-12-15-18-24-27 ST	ARCEUS Central Boiler Aided Electric Combi Boiler

Table 1. Device Notation Table

5.3- Wiring Diagrams

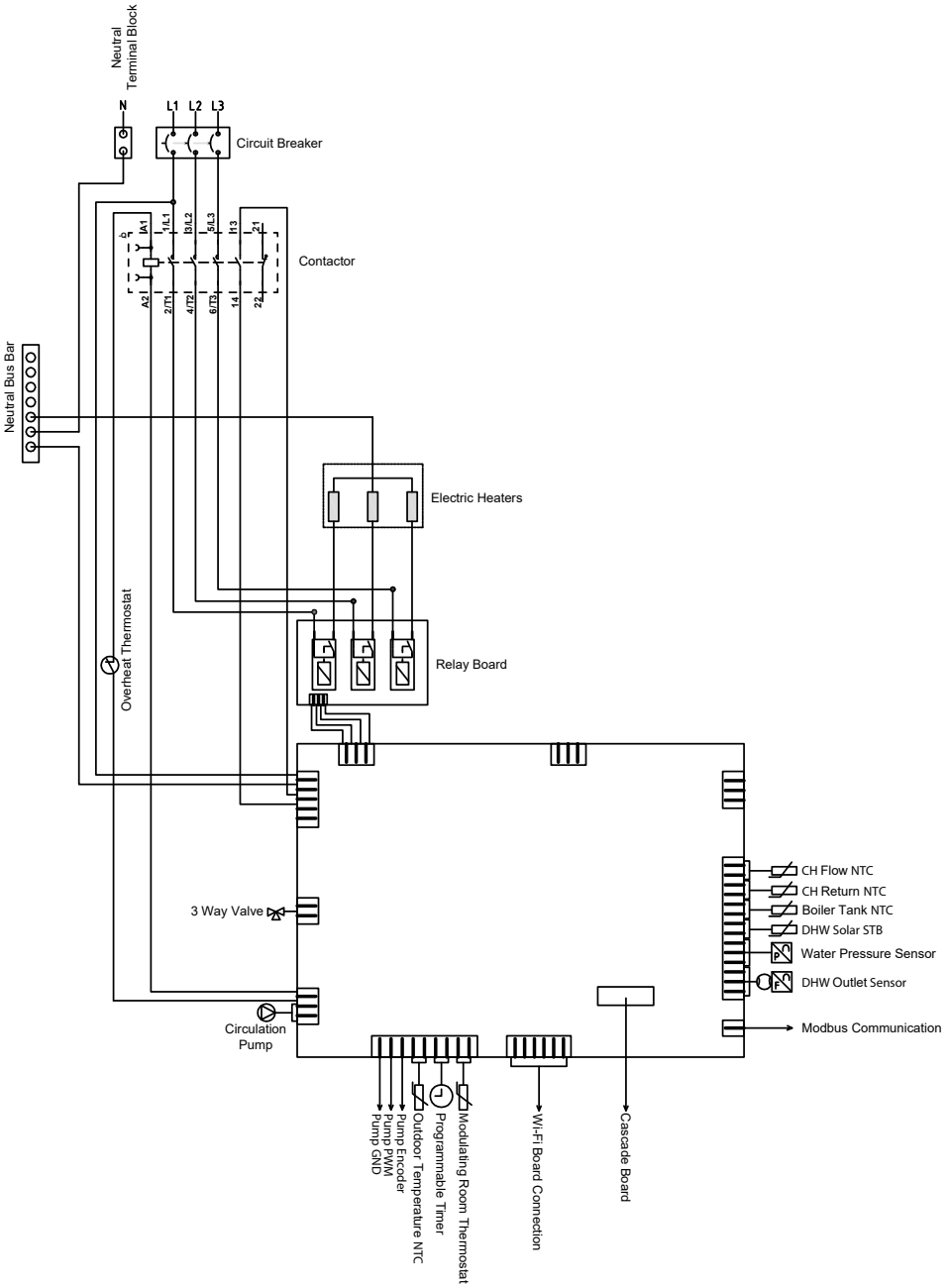

Figure 1. Arceus 6-9 kW Wiring Diagram

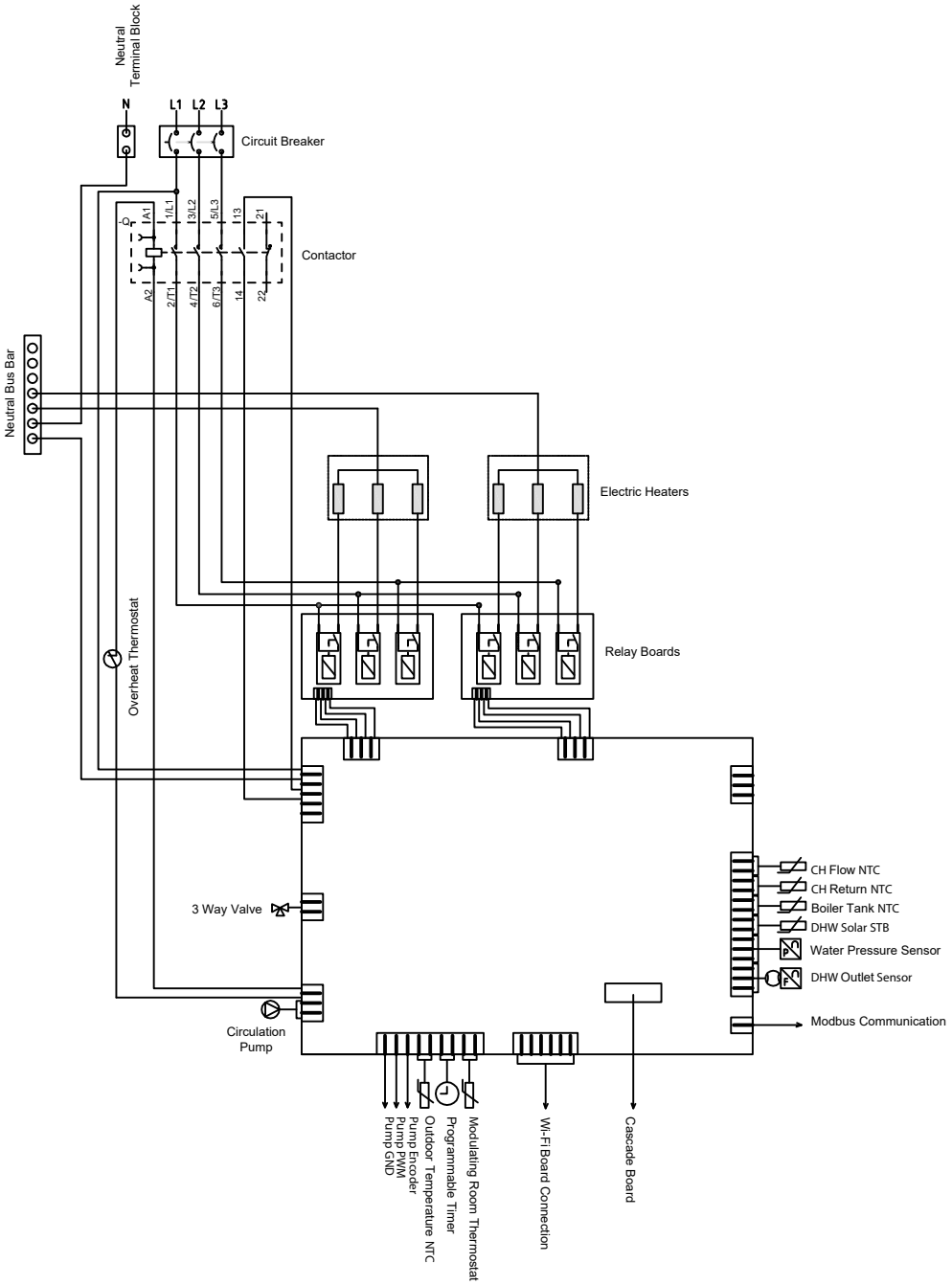

Figure 2. Arceus 12-15 kW Wiring Diagram

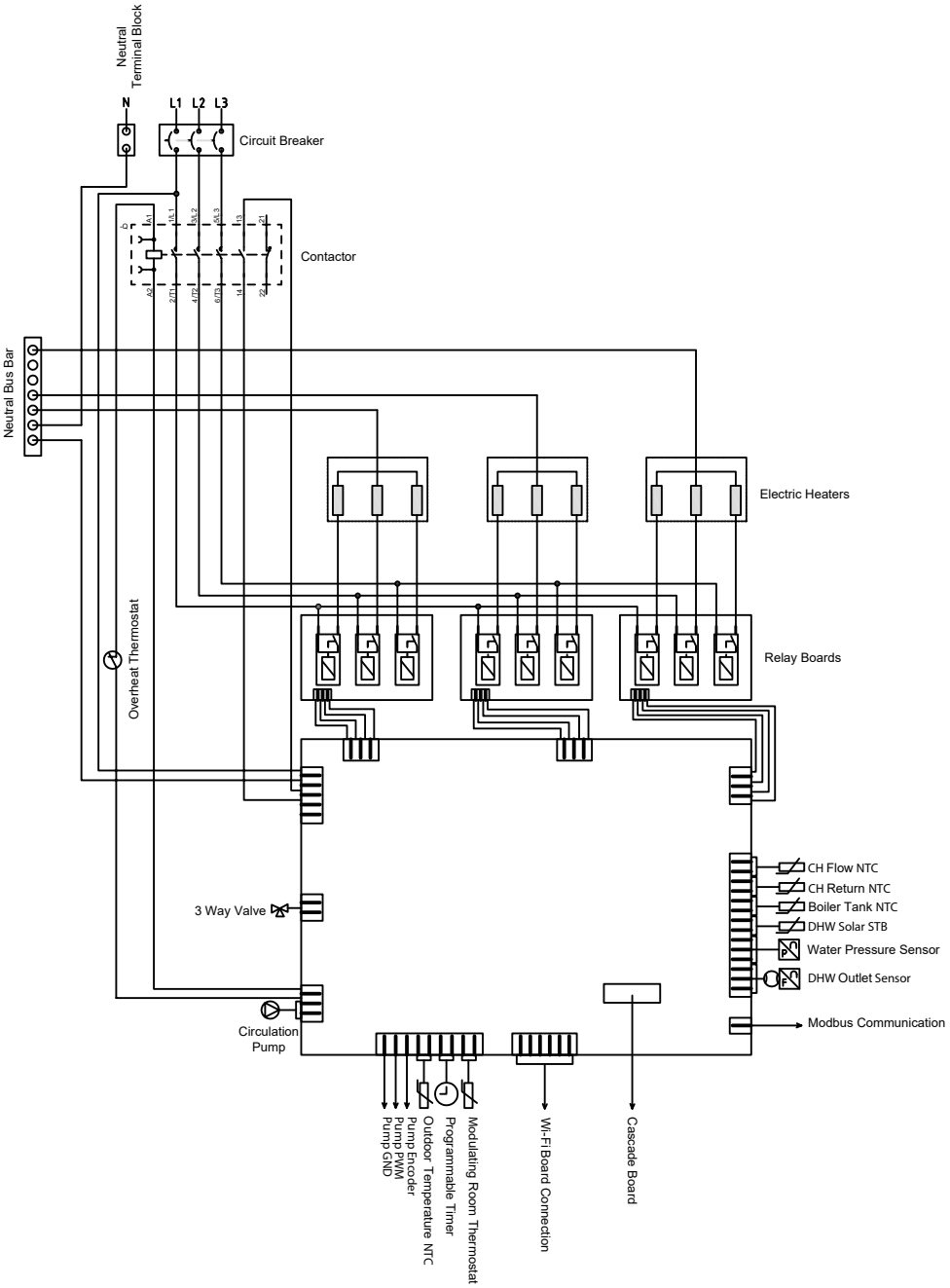

Figure 3. Arceus 18-24 kW Wiring Diagram

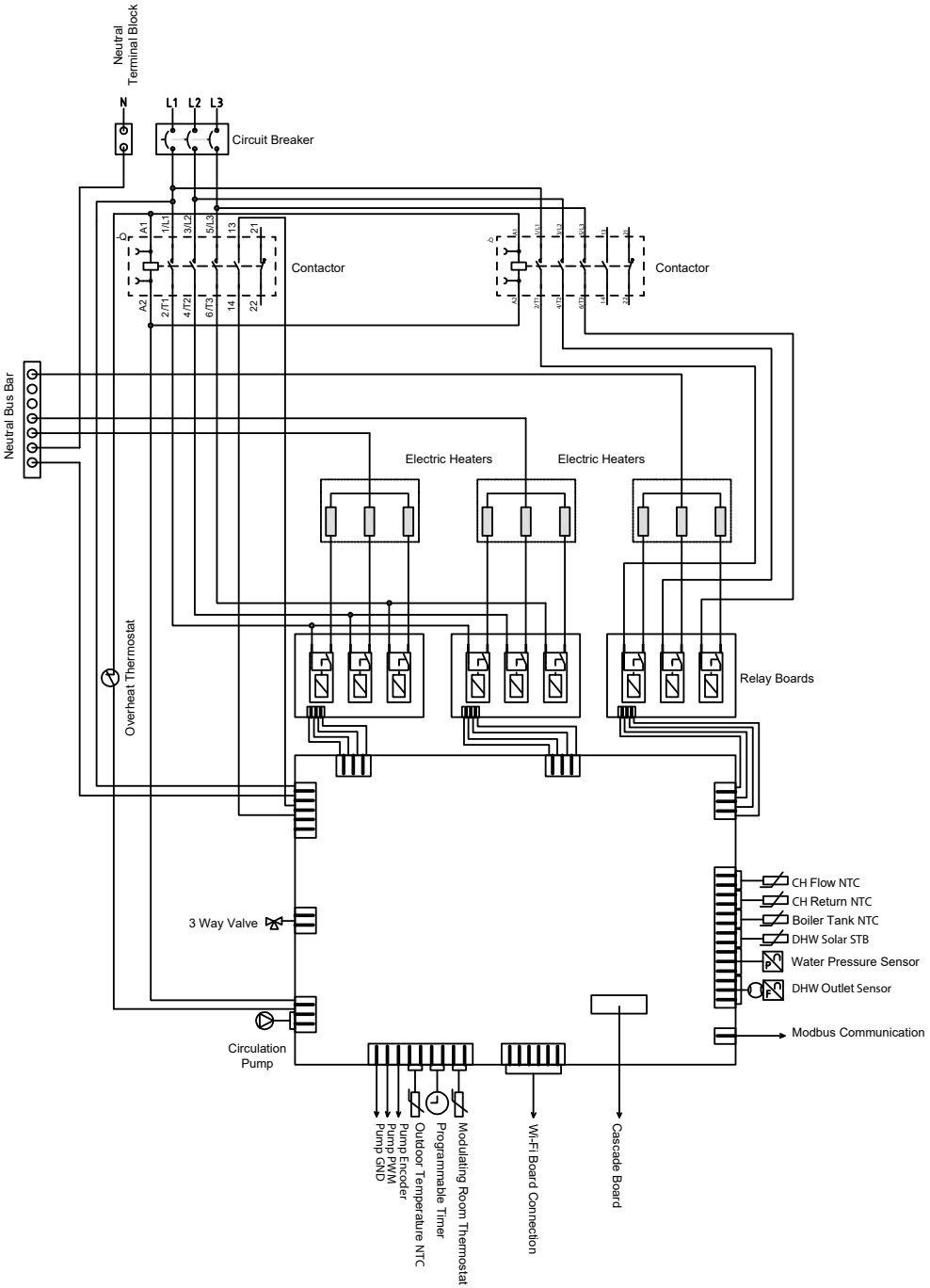

Figure 4. Arceus 27 kW Wiring Diagram

5.4- Detailed View, Component List and Installation

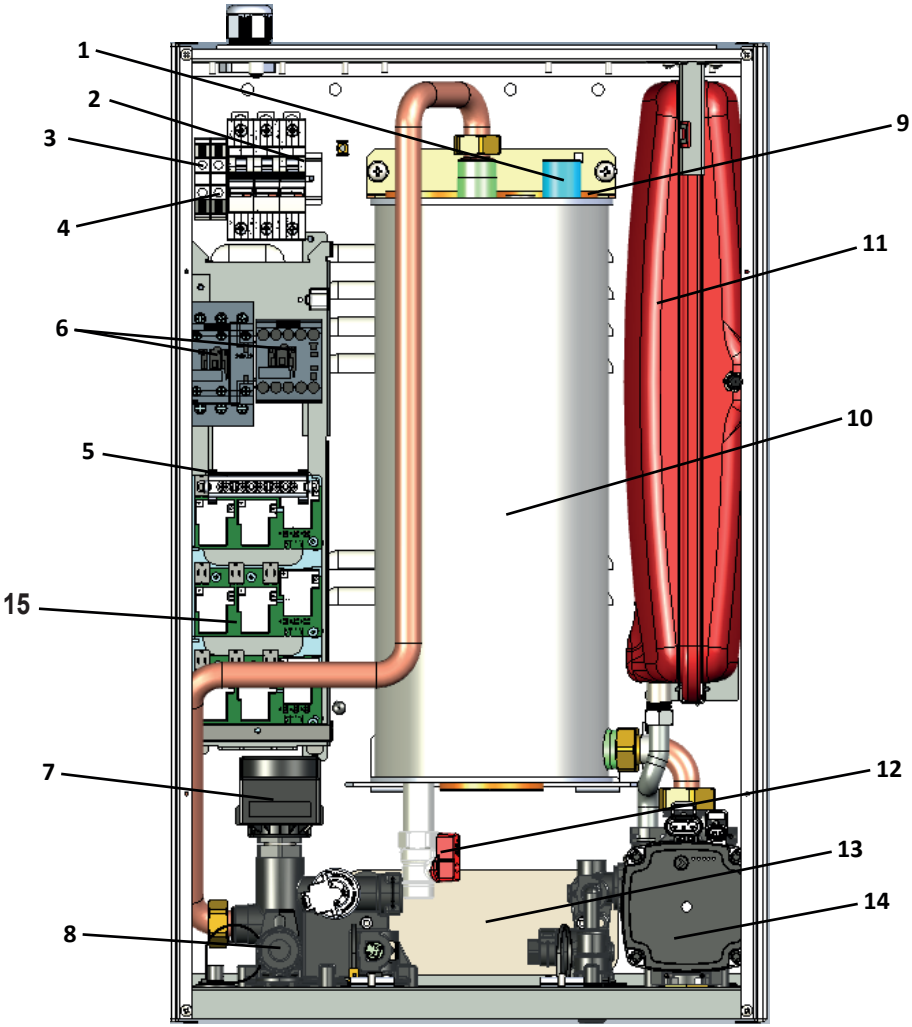

Figure 5. Component View of Device

1. Air Purge
2. Circuit Breaker
3. Ground Terminal Block
4. Neutral Terminal Block
5. Neutral Busbar
6. Cantactor
7. 3 Way Valve
8. 3 Bar Safety Valve
9. Electric Heaters
10. Main Heat Exchanger
11. Expansion Vessel
12. Drain Valve
13. Plate Heat Exchanger
14. Circulation Pump
15. Relay Boards

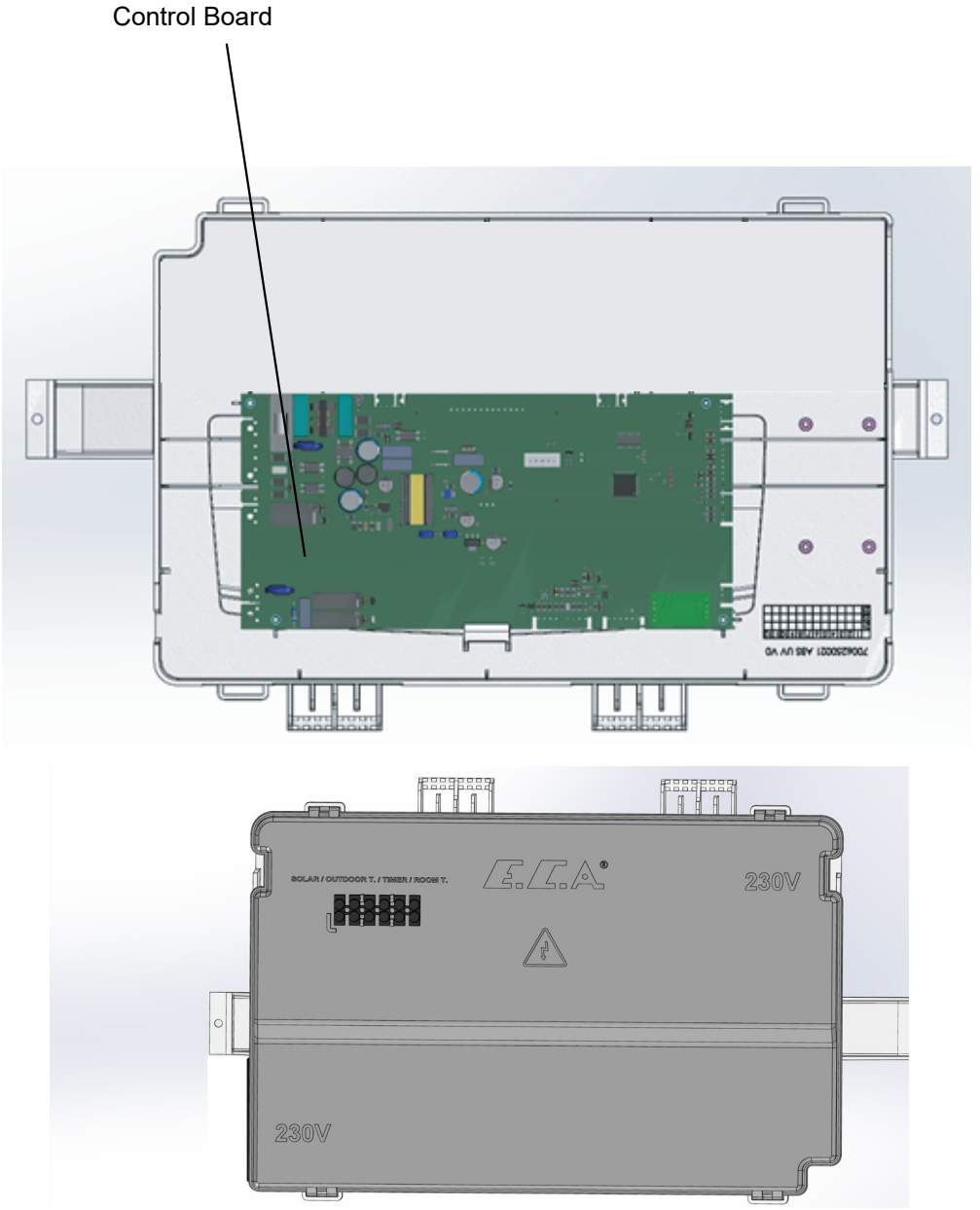

Figure 6.1 Control Board Rear Cover and Terminal Connections

5.4.1- MT Model Installation

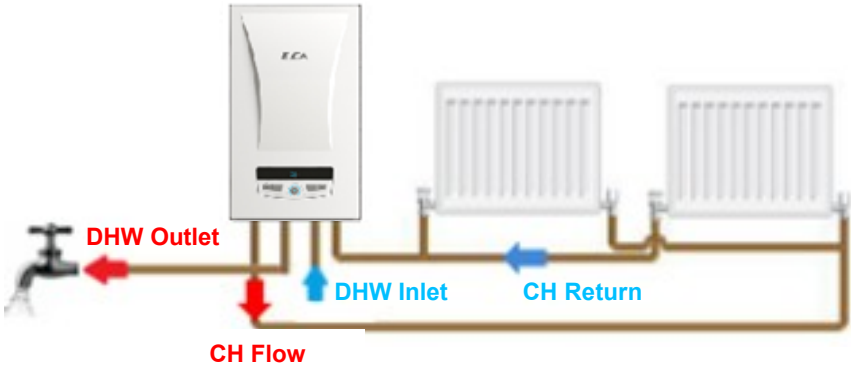

Figurel 7. Monothermic Device Installation Scheme

5.4.2- CH Model Installation

Figure 8. CH Device Installation Scheme

5.4.3- ST Model Installation

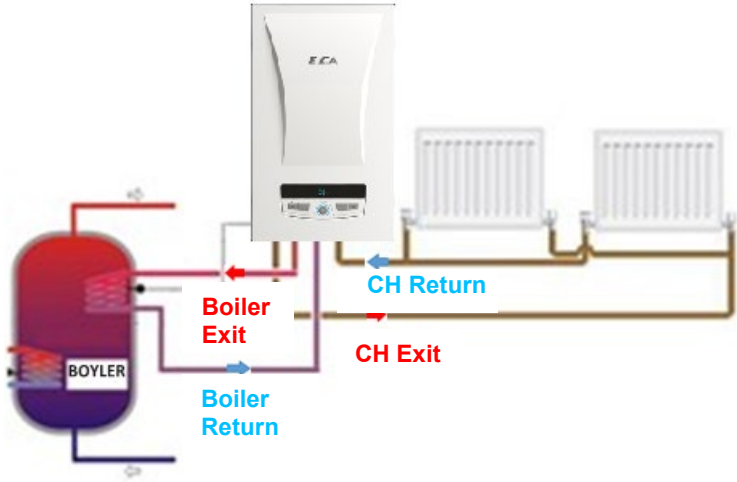

Figure 9. ST Device Installation Scheme

6- PACKAGE

CAUTION: Warnings on the carton package must be observed during transportation and storage of the device.

- The device is delivered in a carton box with dimensions of 735 x 345 x 490 (HxWxD) as supported by lower and upper styrofoams.

- The parts required for the installation of the device (wall bracket, 5 gaskets, 3 dowels, and fixing screws for water connections) are placed in the upper styrofoam. The user manual is placed between the upper styrofoam and the combi boiler.

7- ASSEMBLY

7.1- Selection of Device's Assembly Location

The location where the device can be assembled and spaces to be left around it for safety, service, maintenance, and use purposes must be as shown in Figure 10.

Figure 10: Indicates the minimum spaces to be left from the top and sides of the device (Dimensions are given in mm).

For correct service and maintenance of the combi boiler, the installation should be carried out in accordance with the following minimum spaces. The position of the combi boiler must be checked in accordance with the technical rules.

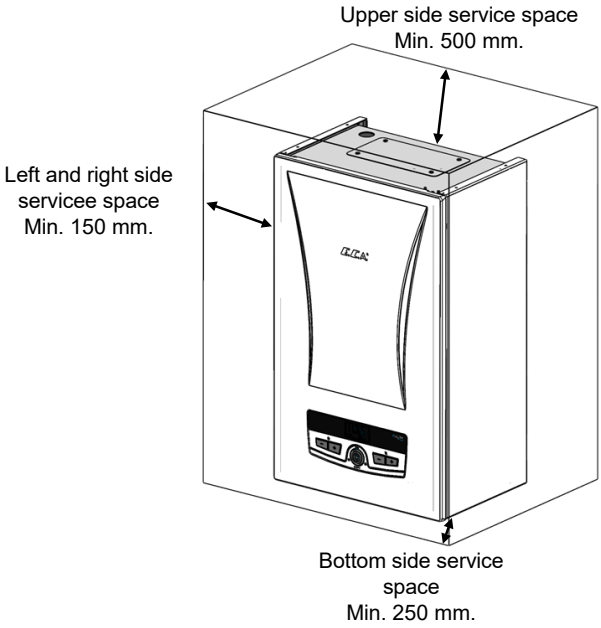

Figure 10- Required spaces for the assembly of the device

- The device can not be used at altitudes higher than 2000 m above sea level.
- There is no need to remove side panels for the inside combi boiler service operations. Min. 50 mm spaces are given by considering a possible side panel sheet replacement.
- Do not assemble your combi boiler in places where it will be exposed to direct sunlight. Sun exposure can cause discoloration on the outer surface of your device over time.
- The ambient temperature of the device's assembly location must be between 5 - 35 °C.
- The device must not be assembled outdoors.
- The device must not be assembled on devices with a direct steam outlet.
- The device must not be assembled in areas where it can be at risk of direct water exposure.
- The device must not be assembled on damp places such as bathtubs, shower cabinets and must be assembled at least 50 cm away from these areas.
- Since the outer surface temperature of the device does not exceed 85°C at maximum heating power, no special protective measures are required for combustible building materials and components.

7.2- Wall Mounting of the Device

After determining the place where the combi boiler is mounted:

• Using the assembly template (Page 30 - 31) in the user manual of the device, the locations of the fixing screws of the wall bracket and the mounting bracket are marked.

• After the marked points are drilled, the wall bracket and mounting bracket are securely fixed to the wall with the dowel and fixing screws included in the packaging of the device.

• Finally, the bracket on the rear surface of the combi boiler is placed on the hooks on the bracket that you mounted on the wall and then the combi boiler is hanged on the wall.

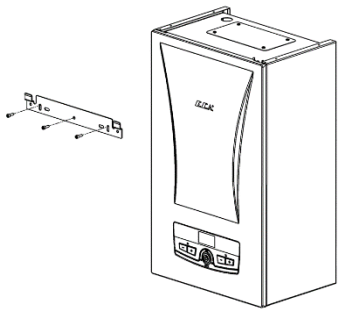

Figure 11. Bracket Assembly

8- CONNECTIONS

8.1- Water Pipe Connections

- The water connections between the wall mounting bracket fixed on the wall and the combi boiler are made with the pipe group and nipples as shown in the figure.

8.1.1- MT Model

a) Central heating pipe 3/4" outlet line (hot)
b) Domestic water pipe 1/2" outlet line (hot)
c) Domestic water pipe 1/2" inlet line (cold)
d) Central heating pipe 3/4" return line (cold)

- A suitable sized valve should be installed in the water pipelines. In addition, a strainer must be placed in the domestic water (1/2") pipe inlet line and central heating (3/4") pipe return line.
- The hose from the 3-bar safety valve must be connected to the sewage drain line.

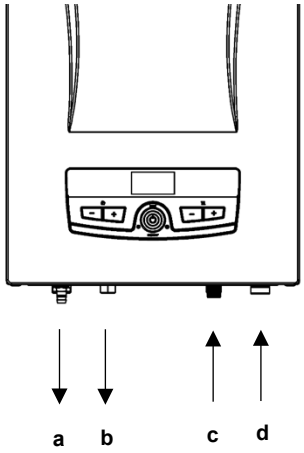

Figure 12. MT boiler water connections

8.1.2- HCH Model

a)Central heating pipe 3/4" outlet line (hot)
b)Central heating pipe 3/4" return line (cold)

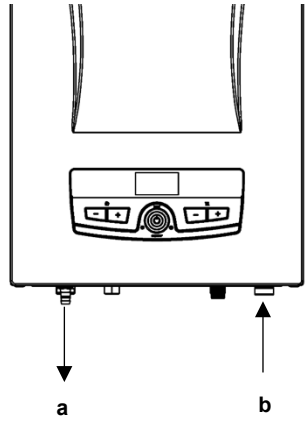

Figure 13. CH boiler water connections

8.1.3- HST Model

a)Central heating pipe 3/4" outlet line (hot)
b) Boiler outlet line 1/2" (hot)
c) Boiler return line 1/2" (cold)
d) Installation Filling line 1/2"
e) Central heating pipe 3/4" return line (cold)

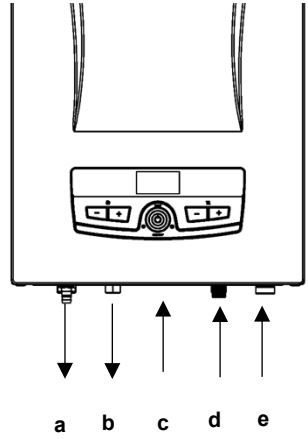

Figure 14. ST boiler water connections

8.2- Electrical Connection

Your combi boiler must be connected to a grounded power line that can supply 230 VAC 50 Hz voltage for single-phase devices and 400 VAC 50 Hz voltage for 3-phase devices. Malfunctions caused by voltage fluctuations are not covered by the warranty.

DANGER: When making the electrical connection of the device, be sure that there is no voltage in the power line.

DANGER: If the supply cable is damaged, it must be replaced by the manufacturer, or an authorized service or an equivalent qualified person.

CAUTION: Power supply line of the device must be protected by a residual current device with 30 mA tripping sensitivity.

CAUTION: The electrical connection of your device must be made according to the cable sections in the table.

CAUTION: There is a circuit breaker placed in the device for overcurrent protection. In case the circuit breaker trips, call an authorized service

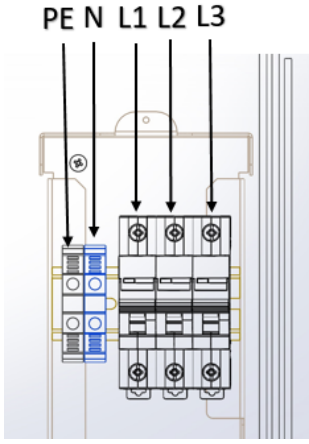

CAUTION: Only 6, 9 and 12 kW models are suitable for single phase operation.

CAUTION: For single-phase operation of the device, you can connect the live wire of the supply cord to the middle pole of the circuit breaker and bridge to the other poles of the circuit breaker by the bridging bar supplied with the product.

Figure 15. Device Mains Connections

CAUTION: For single-phase operation, a power supply cord with suitable cross section defined for single-phase operation must be used.

Figure 16. Bridging bar

CAUTION: Bridging bar must not be used in 3-phase operation.

CAUTION: Malfunctions caused by power supply grid are not associated with the device and are not covered by warranty.

Device	Power Supply	Supply Cord (mm^2)	Nominal Current (A)	Supply Line Minimum Circuit Breaker Capacity
ARCEUS 6 CH-ST	Single-phase	3x6	26	B32-1P
	Three-phase	5x2.5	9	B10-3P
ARCEUS 9 CH-ST	Single-phase	3x10	39	B40-1P
	Three-phase	5x2.5	13	B15-3P
ARCEUS 12 MT-CH-ST	Single-phase	3x10	52	B63-1P
	Three-phase	5x4	17	B20-3P
ARCEUS 15 MT-CH-ST	Three-phase	5x6	22	B25-3P
ARCEUS 18 MT-CH-ST	Three-phase	5x6	26	B32-3P
ARCEUS 24 MT-CH-ST	Three-phase	5x6	35	B40-3P
ARCEUS 27 MT-CH-ST	Three-phase	5x10	39	B40-3P

Table 2. Power Supply Connection Requirements

8.3 Room Thermostat

One of the optional room thermostats compatible with your device can be used to provide local heating control.

E.C.A. On/Off Room Thermostat T6360

7006901312

E.C.A. On/Off Room Thermostat T6360

7006907804

E.C.A. Smart Combi Boiler Kit

7006907531

E.C.A. Digital Room Thermostat Cordless Programmable CM727

7006902046

Poly 100 W Room Thermostat

7006903001

E.C.A. Digital Room Thermostat

7006902502

E.C.A. On/Off Cordless Room Thermostat T6360

7006907522

E.C.A. On/Off Cable Room Thermostat

7006907519

E.C.A. Programmable Digital Room Thermostat

CM707

7006901313

Wireless

7006901501

9- INITIAL START-UP, OPERATION AND SHUT DOWN

9.1- Initial Start-Up

- First of all, the electrical connection of combi boiler should be made. The electrical connection of the device must be connected to a grounded supply line that can supply sufficient voltage for the device.
- All radiator valves are opened.
- The radiator outlet-return valves of the combi boiler must be open.
- After these operations, the filling valve is slowly opened to start water filling.
- The filling process is continued until the water pressure read on the device screen is between 1.5 to 2 bar and then the valve is closed.
- When the water pressure rises above 0.8 bar, the combi boiler switches to automatic air purge mode, and “AP” is displayed on the device. In this case, the RESET button should never be pressed and it should be waited for the 16-second air purge process to complete.
- During commissioning, the pressure on the pressure gage should be checked frequently. If the pressure drops frequently, there is a leak in the water installation.
- To discharge air from the central heating installation, the air purgers of the radiator are loosened and the air is allowed to discharge until water comes out. This is done for all radiators.
- The pressure is rechecked via the LCD screen. The filling valve is opened and the pressure is allowed to reach 1.5-2 bar.
- Whether there is air in the central heating installation is checked from the radiator air purgers. For fully efficient heating, all air must be evacuated from the installation.
- Finally, check for any leaks in the radiator and installation pipes.

CAUTION: To prevent calcification of the heat exchanger, the pH of the water to be used in the combi boiler installation should be between 7.5 to 9.5. If there are any aluminum parts in the installation, the pH should be less than 8.5. The hardness value of the water to be used in combi

- Check the domestic water installation by opening the hot water tap. Check for are any leaks in the installation pipes.
- The initial start-up of the device must be performed by the authorized service.
- After the installation and initial start-up operations of the device are completed, ask the authorized service for information about how to operate the device and the safety devices.

Ask for information for econiomic and comfortable use of the device in Eco/Comfort modes.

9.2- Turning Off the Device

You can turn off the combi boiler by holding the On/Off button for 3 seconds. The screen will turn off in 1 minute.

Anti freeze protection function remains active.

10- CONTROL PANEL

10.1- Button Functions

Reset/Mode Selection Button

Using mode can be changed by pressing the mode selection button to change between the winter mode and the summer mode. If the button is pressed for 3 seconds, the device will switch to the "stand by" position. It will be enough to press the button once to set the device in operation position.

Domestic Water Temperature Increase Button

With the domestic water temperature increase button, the temperature of the domestic water can be increased to 65°C.

Central Heating Circuit Temperature Increase Button

With the central heating circuit temperature increase button, the temperature of the heating water in the central heating circuit can be increased to 80°C.

Domestic Water Temperature Decrease Button

With the domestic water temperature decrease button, the temperature of the domestic water can be decreased to 30°C.

Heating Circuit Temperature Decrease Button

With the central heating circuit temperature decrease button, the temperature of the heating water in the central heating circuit can be decreased to 30°C.

10.2- LCD Screen and Keypad:

The LCD screen displays the icons described in the following figure.

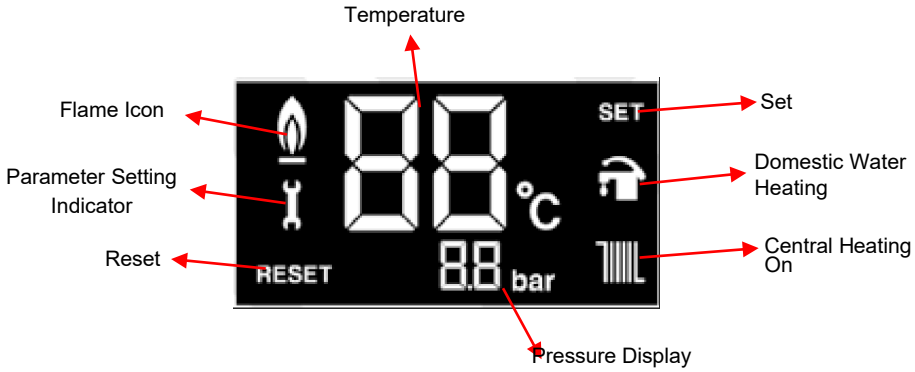

Figure 17 Keypad and LCD Screen Symbols

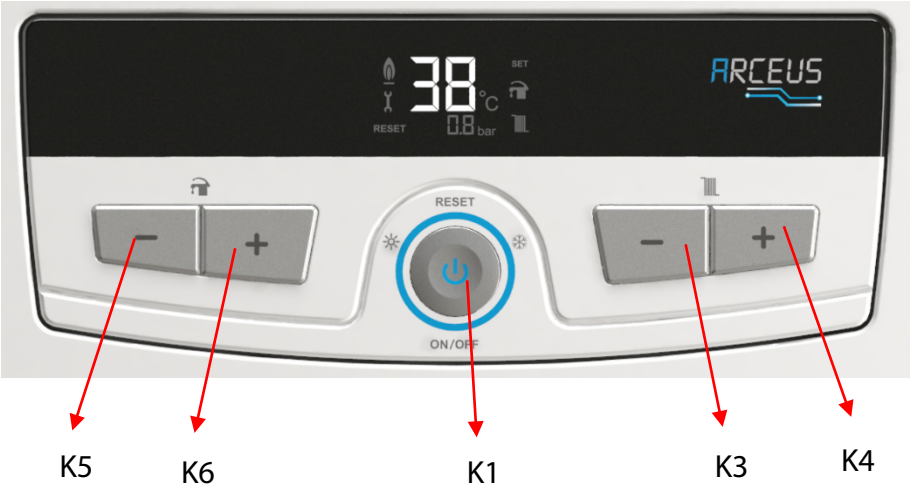

Figure 18. Control Panel Button Configuration

10.2.1 Button Functions:

Button Number	Button Name	Function
K4	CH Plus	- Increases central heating set temperature - Increases password value at parameter menu entry - Increases parameter value - Indicates information value - Indicates error history value
K3	CH Minus	- Reduces central heating set temperature - Reduces password value at parameter menu entry - Reduces parameter value - Indicates information value - Indicates error history value
K6	DHW Plus	- Increases domestic water set temperature - Allows for selection between parameters, information, error history, and clear error history menus - Confirms the password at parameter menu entry - Increases parameter number - Shows information number - Increases fault history number

K5	DHW Minus	- Reduces domestic water set temperature - Allows for selection between parameters, information, error history, and clear error history menus - Confirms the password at parameter menu entry - Reduces parameter number - Shows information number - Reduces fault history number
K1	Mode	- Allows for selection between STANDBY MODE, SUMMER MODE, and WINTER MODE when shortly pressed. - Resets error - Allows skipping the test mode - Allows skipping the AP function - Directs to the service menu when pressed for 5 seconds - Allows access to the selected sub-menu in the service menu - Exits from the parameter menu with changes saved when pressed for 5 seconds, - Exits from the error history menu when pressed for 5 seconds
K3 & K4	CH+ & CH-	Switches to test mode when pressed for 5 seconds

Table 3. User Button Functions

10.3- Operation Modes:

10.3.1- Standby Mode (Off Mode): It is the mode in which the device can be set to standby mode. In this mode, central heating and domestic water heating demands cannot be met.

10.3.2- Summer Mode: In this mode, the device does not perform central heating but does domestic water heating if there is a demand.

10.3.3- Winter Mode: In this mode, the device performs both central heating and domestic water heating if there is a demand.

10.3.4- Domestic Water (DHW) Comfort Mode: In this mode, water in the heat exchanger is kept at the domestic water set temperature and thus can be supplied at the desired temperature when the domestic water is turned on. While heating the water in the heat exchanger in comfort mode, tap icon on the screen flashes twice a second to inform the user that Comfort Mode heating is in progress. At the same time, “CO” letters are shown on the pressure indicator field. Comfort mode can be activated by pressing K5 and K6 buttons together for 5 seconds when the device is in ECO mode.

Figure 17. DHW Comfort Mode Screen View

10.3.5- Domestic Hot Water (DHW) Eco Mode: At the times that hot water demand is not expected (e.g. holidays etc.) or more economic use is preferred, ECO mode prevents the water in the exchanger to be heated and provides a more economic use of the device. When the ECO Mode is active “EC” letters are shown on the pressure indicator field. ECO mode can be activated by pressing K5 and K6 buttons together for 5 seconds when the device is in Comfort mode.

10.3.6- Air Purge Mode (AP Mode): It is the process that the device automatically performs to discharge air in the central heating installation for 160 seconds. While in this mode, “AP” is displayed on the screen. The circulation pump runs for 15 seconds and stops for 5 seconds in every 20 seconds. The three-way valve motor also changes position between CH-DHW every 40 seconds. The situations where this mode is activated are listed below:

- When the device is powered for the first time or after the power goes out and comes back,
- After a reset process following the overheating error,
- After a high water pressure or low water pressure error is eliminated.

CAUTION: Do not press the RESET button while the device is in AP

10.3.6- No-Frost Mode: During the winter season, when the installation water temperature falls below 6℃, the no-frost mode function is activated and the device continues to operate until the installation water outlet temperature rises to 15℃. In order for the freeze protection function to work, the following conditions must be checked and ensured by the customer:

- The power supply of the device must be on.
- The radiator valves must be open.
- The system water pressure must be appropriate.
- The freeze protection function helps protect your device but does not protect your installation.
- If the device is not to be operated in places where there is a risk of freezing, it is necessary to drain the water or use an anti-freeze agent.

10.4- Error Preventive Functions

10.4.1- Anti Freeze Protection: During the winter season, when the water temperature of the installation drops below 6ºC, anti freze protection is activated and the device keeps on heating until water temperature reaches to 15ºC. Below conditions must be provided and controlled by the customer for anti freze protection to work properly:

- Power supply of the device must bu connected
- Radiator valves must be open
- Water pressure of the system should be proper
- Anti freze protection function does not protect your installation, it protects the device
- If the device will not be operated in locations where there is a risk of freezing, the water of the device should be drained and antifreeze solutions should be used.

10.4.2- Pump Anti-Blocking Function: In situations that the pump is not turned on for 24 hours straight, pump is turned on for 5 seconds to prevent it to be stuck. This function is active in error status and stand by mode.

10.4.3- 3 Way Valve Anti-Blocking Function: In situations that the 3 way valve is not turned on for 24 hours straight, 3 way valve is turned on and changes position for 10 seconds to prevent it to be stuck. If a heat demand occurs during this procedure, anti blocking function is interrupted and the valves takes the position of normal working condtion. This function is active in error status and stand by mode.

10.4.4- Maintenance Reminder Function: After the time period that the device stays connected to the power upply reaches 8760 hours (1 year), the customer is informed that the annual maintenance time has come by flashing “ASE” characters and steady alarm icon on the screen. During this notification, the functionality of the device does not change. If the customer confirms this notification by pressing K1 button, timer is reset and the reminder does not appear for another 8760 hours.

In case the customer has periodic maintenance service, service resets the clock and 8760 hour period starts over.

11- ERROR CODES AND DESCRIPTIONS

ERROR TYPE	DESCRIPTION	ERROR CODE
Limit Thermostat Protection Error	This error is displayed if the temperature read by one of the central heating outlets or return temperature sensors is above 107°C. The error must be reset when the temperature reduces to 85°C.	H03
Central Heating Return Temperature Sensor Error	This error is displayed if the central heating return temperature sensor is short or open circuit, or damaged. Domestic water and central heating demands are stopped. When this error is cleared, normal operation begins.	L33
Central Heating Outlet Temperature Sensor Error	This error is displayed if the central heating outlet temperature sensor is short or open circuit, or damaged. Domestic water and central heating demands are stopped. When this error is cleared, normal operation begins.	L35
Central Heating Outlet-Return Sensor Change Test Error	This error is displayed when the central heating outlet temperature sensor and return temperature sensor change test fails. The error is cleared by reset.	H80
Too Frequent Error Reset Error	This error is displayed when 5 error resets are performed within 1 hour. Domestic water and central heating demands are stopped. This error can only be cleared by disconnecting the power to the mainboard.	L13

Low Water Pressure	The water pressure parameter FP11 is at a low level. This error is displayed if the water pressure is less than FP11/10 bar. When the water pressure is greater than (FP11/10+0.4 bar), the error is automatically cleared.	L37
Outdoor Temperature Sensor Error	This error is displayed if the outdoor temperature sensor is short or open circuit, or damaged. Domestic water and central heating demands are stopped. When this error is cleared, normal operation begins.	L39
High Water Pressure	The water pressure parameter is at a high level. This error is displayed if the water pressure is greater than 3,3 bar. When the water pressure is less than 3,3 bar, the error is automatically cleared.	L40
Water Filling In Progress Error	This error code is displayed if the water filling parameter has been automatically selected and the water filling is in progress.	L41
Water Filling Timeout Error	This error code is displayed if the water filling parameter has been automatically selected and the water filling process could not be completed within the limit time.	L42
Low Pressure Error After Water Filling Attempt	This error is displayed if the water filling parameter has been automatically selected and the water filling has not been completed before the timeout and 3 water filling attempts have been made. The error must be cleared by pressing the RESET button.	L43
Water Pressure Sensor Error	This error is displayed if the pressure sensor is short or open circuit, or damaged. When this error is cleared, normal operation begins.	L47
Solar Boiler Tank Temperature Sensor Error	This error is displayed if the solar boiler tank temperature sensor is short or open circuit, or damaged. Domestic water and central heating demands are stopped. When this error is cleared, normal operation begins.	L50
Solar Panel Temperature Sensor (PT1000) Error	This error is displayed if the solar panel temperature sensor (PT1000) is short or open circuit, or damaged. Domestic water and central heating demands are stopped. When this error is cleared, normal operation begins.	L51
Domestic Water Sensor Error	This error is displayed if the domestic water temperature sensor is short or open circuit, or damaged. Domestic water and central heating demands are stopped. When this error is cleared, normal operation begins.	L52

12- USEFUL PRODUCT INFORMATION

12.1- Information on the Efficient Use of the Combi Boiler in Terms of Safety and Energy Consumption

- The insulation of your building is extremely important. In houses with double-glazed windows and insulated walls, significant energy savings are achieved as heat loss is minimized.
- Using a Thermostatic valve on your radiators ensures that the room temperature remains constant or saves energy.
- Turning radiator valves to lower levels in rooms that will not be used for a long time and keeping their doors closed will reduce fuel consumption.

- If you use a program clock with your device, your combi boiler will run at the times you set and consume less fuel.
- If you use your combi boiler with a room thermostat, it keeps the room temperature at the level you set, reducing fuel consumption.
- Covering the radiator top and sides with furniture-like things adversely affects hot air circulation, thus prevents the environment from heating and increases fuel consumption.
- If you will leave your device in operation late at night, keeping the water temperature of the central heating circuit at low levels will ensure saving.
- If you feel that the room temperature is high, the radiator valves should be closed instead of opening a window.

12.2- Clogging in Installation

- In old installations with iron pipes, usually clogging is encountered shortly after the device is commissioned.
- In case of clogging in installation, an inhibitor (Sentinel X400, etc.) should be added to the installation water.

12.3- Cleaning of Combi Boiler

Keep the outer casing of the combi boiler clean by wiping it with a soft damp cloth. Do not use strong, abrasive cleaning agents.
During and after the warranty period of the combi boiler, performing maintenance regularly once a year before the winter season ensures safe use and prolongs the life of the device. The respective maintenance times will be automatically reminded by the combi boiler.
Periodic maintenance must be carried out by the E.C.A. Authorized Services.
Use only original spare parts to guarantee the lifetime and safety of the device.
E.C.A. shall not be liable for any damage to the device or any objects and living beings around it as a result of maintenance by unauthorized service and persons.

13- DISPOSAL OF THE DEVICE

After the lifespan of the device is complete or device is required to be disposed for any other reason, device should not be disposed to a domestic waste and should be submitted to a recycling centre that accepts electric devices.

14.TECHNICAL DATA TABLE

Device Type		ARCEUS EK 6	ARCEUS EK 9	ARCEUS EK 12	ARCEUS EK 15	ARCEUS EK 18	ARCEUS EK 24	ARCEUS EK 27
Nominal Power (kW)		6	9	12	15	18	24	27
Minimum Heating Power (kW)		2	3	2	2	2	2	3
Supply Power Voltage		1~ 230 VAC 3~ 400 VAC	1~ 230 VAC 3~ 400 VAC	1~ 230 VAC 3~ 400 VAC	3~ 400 VAC	3~ 400 VAC	3~ 400 VAC	3~ 400 VAC
Nominal Current (A)		1~ 26,1 3~ 8,7	1~ 39,1 3~ 13,1	1~ 52,2 3~ 17,4	21,7	26,1	34,8	39,1
Power Cord Cross Section (mm²)		1~ 3x6 3~ 5x2,5	1~ 3x10 3~ 5x2,5	1~ 3x10 3~ 5x4	5x6	5x6	5x6	5x10
Protection Class		IPX4D	IPX4D	IPX4D	IPX4D	IPX4D	IPX4D	IPX4D
Sound Level (dB)		42	42	38	38	38	38	38
Net Weight (kg)		26	26	27	27	29	29	29
Gross Weight (kg)		29	29	30	30	32	32	32
Dimensions (HxWxD)		678 x 410 x 288	678 x 410 x 288	678 x 410 x 288	678 x 410 x 288	678 x 410 x 288	678 x 410 x 288	678 x 410 x 288
Central Heating Seasonal Energy Efficiency		39,4	39,5	39,6	39,8	39,8	39,9	39,9
Energy Efficiency Class	Domestic Hot Water Load Profile - Efficiency Class	-	-	M-C	L-C	L-C	XL-C	XL-C
	Central Heating	D	D	D	D	D	D	D

Table 5. Device Technical Data Table

15- ERP MANUAL

1- PRODUCT FICHES

Product fiche for combination boilers as required by EU regulations No 811/2013

ARCEUS Combi ERP		Units	MT Model				
Supplier's name or trademark			E.C.A.				
Supplier's model identifier			Arceus 12 kW	Arceus 15 kW	Arceus 18 kW	Arceus 24 kW	Arceus 27 kW
Space Heating-Temperature application			Medium				
Efficiency Class	Seasonal Space heating		D	D	D	D	D
	Domestic Hot Water Heating Efficiency*		C	C	C	C	C
Water Heating Load Profile*			M	L	L	XL	XL
Rated heat output (Prated)		kW	11,9	14,9	17,9	23,9	26,9
Annual energy consumption	Space heating	kWh	10353	12963	15573	20793	23403
		GJ	37	46	56	75	84
Annual electric consumption	Water heating	kWh	1348	2688	2688	4399	4399
Annual fuel consumption*		GJ	-	-	-	-	-
Energy efficiency	Seasonal space heating	%	36	37	37	37	38
	Water heating*	%	36	37	37	38	38
Sound Power Level Lwa indoors		dB	38				
Specific precautions for assembly, installation and maintanence			All specific precautions for installation, assembly and maintanence are described in the installation and service manual.				

ARCEUS Combi ERP		Units	CH / ST Model						
Supplier's name or trademark			E.C.A.						
Supplier's model identifier			Arceus 6 kW	Arceus 9 kW	Arceus 12 kW	Arceus 15 kW	Arceus 18 kW	Arceus 24 kW	Arceus 27 kW
Space Heating-Temperature application					Medium				
Efficiency Class	Seasonal Space heating		D	D	D	D	D	D	D
Rated heat output (Prated)		kW	5,9	8,9	11,9	14,9	17,9	23,9	26,9
Annual energy consumption	Space heating	kWh	5133	7743	10353	12963	15573	20793	23403
		GJ	18	27	37	46	56	75	84
Energy efficiency	Seasonal space heating	%	36	36	36	37	37	37	38
Sound Power Level Lwa indoors		dB	42	42	38				
Specific precautions for assembly, installation and maintanence		All specific precautions for installation, assembly and maintanence are described in the installation and service manual.							

2. PACKAGE LABEL CALCULATIONS

2. Package fiche for boilers indicating the space heating energy efficiency of the package

2. 1 Package Fiche-Boilers

Seasonal space heating energy efficiency of boiler (1)

'I' : The value of the seasonal space heating energy efficiency of the preferential space heater, expressed in %.

'I' = ____ %

Temperature Control

from fiche of temperature control

Class I = 1%, Class II = 2%, Class III = 1.5%, Class IV = 2%, Class V = 3%, Class VI = 4%, Class VII = 3.5%, Class VIII = 5%

(2) + ____ %

Supplementary boiler

from fiche of boiler

Seasonal space heating energy efficiency (in %)

(____ - 'I') x 0.1 = ± ____ % (3)

Solar Contribution

from fiche of solar device

Collector size (in m²) | Tank Volume (im m²) | Collector efficiency (in %) | Tank rating: A*=0,95, A=0,91, B=0,86, C=0,83, D - G =0,81

('III' x ____ + 'IV' x ____) x 0.9 x (____ /100 x ____) = + ____ % (4)

'III' : The value of the mathematical expression : 294/(11.Prated), whereby 'Prated' is related to the preferential space heater.
'IV' : The value of the mathematical expression : 115/(11.Prated), whereby 'Prated' is related to the preferential space heater.

(1) If tank rating is above A, use 0.95

Supplementary Heat Pump

from fiche of heat pump

'II' : The factor for weighting the heat output of preferential and supplementary heaters of a package as set out in the following table.

Seasonal space heating energy efficiency (in %)

(____ - 'I') x 'II' + = ____ % (5)

Solar contribution and Supplementary heat pump

select smaller value

0,5 x (4) ____ OR 0,5 x (5) ____ = - (6) ____ %

Seasonal space heating energy efficiency class of package (7)

____ %

Seasonal space heating energy efficiency class of package

G	F	E	D	C	B	A	A+	A++	A+++
<30%	≥30%	≥34%	≥36%	≥75%	≥82%	≥90%	≥98%	≥125%	≥150%

The energy efficiency of the package of products provided for in this fiche may not correspond to its actual energy efficiency once installed in a building, as this efficiency is influenced by further factors such as heat loss in the distribution system and the dimensioning of the products in relation to building size and characteristics.

Boiler and supplementary heat pump installed with low temperature heat emitters at 35°C?

from fiche of heat pump

(7)

[ ] + (50 x 'II') = [ ] %

Weighting of Boilers

Psup / (Prated+Psup)[1][2]	II, package without hot water storage tank	II, package with hot water storage tank
0	0	0
0.1	0.3	0.37
0.2	0.55	0.70
0.3	0.75	0.85
0.4	0.85	0.94
0.5	0.95	0.98
0.6	0.98	1
≥ 0.7	1	1

(1) The intermediate values are calculated by linear interpolation between in two adjacent values.
(2) Prated is related to the preferential space heater or combination heater.

2. 2 Package Fiche-Combination Heaters (Boilers or Heat Pumps)

Water heating energy efficiency of combination heater

Declared load profile : ☐

(1) 'I' = ☐ %

Solar Contribution

from fiche of solar device

Auxillary electricity

(1.1 x 'I' - 10 %) x 'II' - 'III' - 'I' = + (2) ☐ %

Water heating energy efficiency of package under average climate

(3) ☐ %

Water heating energy efficiency class of package under average climate

		G	F	E	D	C	B	A	A+	A++	A+++
☐	M	<27%	≥27%	≥30%	≥33%	≥36%	≥39%	≥65%	≥100%	≥130%	≥163%
☐	L	<27%	≥27%	≥30%	≥34%	≥37%	≥50%	≥75%	≥115%	≥150%	≥188%
☐	XL	<27%	≥27%	≥30%	≥35%	≥38%	≥55%	≥80%	≥123%	≥160%	≥200%
☐	XXL	<28%	≥28%	≥32%	≥36%	≥40%	≥60%	≥85%	≥131%	≥170%	≥213%

Water heating energy efficiency under colder and warmer climate conditions

Colder : (3) ☐ **- 0.2 x** (2) ☐ = ☐ %

Warmer : (3) ☐ **+ 0.4 x** (2) ☐ = ☐ %

The energy efficiency of the package of products provided for in this fiche may not correspond to its actual energy efficiency once installed in a building, as this efficiency is uenced by further factors such as heat loss in the distribution system and the dimensioning infl characteristics.

'I' The value of the water heating energy efficiency of the combination heater, expressed in %.

'II' The value of the mathematical expression (220 . Qref)/Qnonsol, where Qref is taken from Regulation EU 811/2013, Annex VII Table 15 and Qnonsol from the product fiche of the solar device for the declared load profile M, L, XL or XXL of the combination heater.

'III' The value of the mathematical expression (Qaux . 2,5)/(220 . Qref), expressed in %, where Qaux is taken from the product fiche of the solar device and Qref from Regulation EU 811/2013, Annex VII Table 15 for the declared load profile M, L, XL or XXL.

SELLER COMPANY'S

Title : .....

Address : .....

.....

Tel - Fax: .....

.....

Invoice Date and No: .....

.....

Submit Date and Location: .....

Date, Signature and Seal:

PRODUCT'S

Type : Electric Boiler

Brand : E.C.A.

Model : .....

.....

Serial Number : .....

Submit Date and Location: .....

Maximum Repair Time: 20 Work Days

Warranty Time : 3 Years

AUTHORIZED SERVICE

Title : .....

Address : .....

.....

Tel - Fax: .....

.....

Assembly Date : .....

Date, Signature and Seal:

FREE INITIAL START-UP COUPON

Type : Electric Boiler

Brand : E.C.A.

Model : .....

Serial Number : .....

Assembly Date : .....

Authorized Service Title: .....

Date : .....

Service Ticket Number : .....

PRODUCTION

Organize Sanayi Bolgesi 3.Kisim
Mustafa Kemal Boulevard No:13 45030 MANISA
Tel.:+90 236 213 00 21
Fax:+90 236 213 08 59
email:emas@emas.com.tr www.emas.com.tr

7006910085 - 2.0